Basicline 2 compact box PC

User manual

UM EN BL2 BPC 1501

User manual
Basicline 2 compact box PC

UM EN BL2 BPC 1501, Revision J 2024-05-17

This user manual is valid for:

Designation	Version
BL2 BPC 1500	1138374
BL2 BPC 1501S	1130682
BL2 BPC 1501S-W	1141904
BL2 BPC 1501E	1130669
BL2 BPC 1501E-W	1141843
BL2 BPC 1501E-64-W10	1158241
BL2 BPC 1501E-W-64-W10	1158252
BL2 BPC 1501E-64	1305869
BL2 BPC 1501E-W-128	1305860
BL2 BPC 1501E-128-W10	1158235
BL2 BPC 1501E-W-128-W10	1158245
BL2 BPC 1501E-64-W10-T	1158247
BL2 BPC 1501E-W-64-W10-T	1158244
BL2 BPC 1501E-128-W10-T	1158243
BL2 BPC 1501E-W-128-W10-T	1158231
BL2 BPC 1541S-4/64-W10	1272688
BL2 BPC 1541E-8/128-W10	1272687
BL2 BPC 1541S-4/64	1272827
BL2 BPC 1541E-8/0	1272829

4038_en_J

Phoenix Contact GmbH & Co. KG • Flachsmarktstraße 8 • 32825 Blomberg • Germany
phoenixcontact.com

Table of contents

1 For your safety 3

1.1 Labeling of warning notes 3

1.2 Qualification of users 3

1.3 Field of application of the product 4

1.3.1 Intended use 4

1.3.2 Product changes 4

1.4 Security in the network 5

2 Overview and ordering data 7

2.1 Description 7

2.2 Ordering data 7

2.3 Dimensions 10

3 Installation 11

3.1 Mounting 11

3.1.1 Wall mount 11

3.2 Interfaces 14

3.2.1 Power connection 15

3.2.2 Antenna installation 16

3.2.3 Serial communication (BL2 BPC 15…E… only) 16

4 Operation 19

4.1 LED operation 19

5 Maintenance 21

5.1 M.2 drive 21

5.1.1 Installation 21

5.2 Real-time clock battery 23

5.2.1 Battery replacement 23

5.3 UEFI 26

5.3.1 Configurable D SUB-9 connector 26

A Technical appendix 29

A 1 Technical data 29

B Appendixes 33

B 1 List of figures 33

B 2 List of tables 35

1 For your safety

Read this user manual carefully and keep it for future reference.

1.1 Labeling of warning notes

This symbol indicates hazards that could lead to personal injury.

There are three signal words indicating the severity of a potential injury.

DANGER
Indicates a hazard with a high risk level. If this hazardous situation is not avoided, it will result in death or serious injury.

WARNING
Indicates a hazard with a medium risk level. If this hazardous situation is not avoided, it could result in death or serious injury.

CAUTION
Indicates a hazard with a low risk level. If this hazardous situation is not avoided, it could result in minor or moderate injury.

This symbol together with the **NOTE** signal word warns the reader of actions that might cause property damage or a malfunction.

Here you will find additional information or detailed sources of information.

1.2 Qualification of users

The use of products described in this manual is oriented exclusively to electrically skilled persons or persons instructed by them. The users must be familiar with the relevant safety concepts of automation technology as well as applicable standards and other regulations.

1.3 Field of application of the product

1.3.1 Intended use

The products described in this document are designed for use in manufacturing and industrial environments.

The products are built according to the latest safety requirements. However, dangerous situations or damage to the products or other property can arise from misuse of this device.

The products fulfill the requirements of the EMC directives and harmonized European standards. Any modifications to the systems can influence the EMC behavior.

The device contains valuable recyclable materials, which should be utilized. The electronic circuit board is fitted with a lithium battery. Dispose of the device separately from other waste, i.e., via an appropriate collection site.

Radio interference

These products are Class A items of equipment (EN 61000-6-4). When using the equipment in residential areas, it may cause radio interference. In this case, the operator is obligated to implement appropriate measures.

1.3.2 Product changes

Changes or modifications to hardware and software of the device are not permitted.

Incorrect operation or modifications to the device can endanger your safety or damage the device. Do not repair the device yourself. If the device is defective, please contact Phoenix Contact.

1.4 Security in the network

NOTE: Risk of unauthorized network access

Connecting devices to a network via Ethernet entails the danger of unauthorized access to the network.

To prevent unauthorized network access, please read the following notes:

- If possible, deactivate unused communication channels.
- Assign passwords such that third parties cannot access the device and make unauthorized changes.
- Due to its communication interfaces, the device should not be used in security-critical applications unless additional security appliances are used. Therefore, please take additional protective measures in accordance with the IT security requirements and the standards applicable to your application, e.g., virtual networks (VPN) for remote maintenance access, firewalls, etc., for protection against unauthorized network access.
- On first request, you shall release Phoenix Contact and the companies associated with Phoenix Contact GmbH & Co. KG, Flachsmarkstrasse 8, 32825 Blomberg, Germany in accordance with §§ 15 ff AktG (German Stock Corporation Act), hereinafter collectively referred to as “Phoenix Contact”, from all third-party claims made due to improper use.
- For the protection of networks for remote maintenance via VPN, Phoenix Contact offers the mGuard product series of security appliances; these are described in the latest Phoenix Contact catalog (phoenixcontact.net/products).
- Additional measures for protection against unauthorized network access are listed in the AH EN INDUSTRIAL SECURITY application note. The application note can be downloaded at phoenixcontact.net/products).

2 Overview and ordering data

2.1 Description

The BL2 BPC 15… is a small footprint, configurable box PC (BPC). The small footprint allows it to be placed in applications where larger PCs do not fit or are not applicable.

Features

BL2 BPC 1501…
- Compact, IP30 housing
- Fanless design
- Intel® Celeron® N3350 processor
- DIN rail- and wall-mount options
- Two integrated RJ45 Ethernet ports
- DisplayPort for visual applications
- Optional configurable COM ports
- Optional WLAN capabilities

BL2 BPC 1541…
- Compact, IP30 housing
- Fanless design
- Intel® Atom® E3940 processor
- DIN rail- and wall-mount options
- Two integrated RJ45 Ethernet ports
- DisplayPort for visual applications
- Optional configurable COM ports
- Optional WLAN capabilities

2.2 Ordering data

Products

Description	Type	Order No.	Pcs./Pkt.
Industrial box PC, configurable, fanless, IP30	BL2 BPC 1500	1138374	1
Industrial box PC, Intel® Celeron® processor N3350 1.10/2.40 GHz, fanless, IP30, 32 GB eMMC data storage	BL2 BPC 1501S	1130682	1
Industrial box PC, Intel® Celeron® processor N3350 1.10/2.40 GHz, fanless, 32 GB eMMC data storage, IP30, WLAN	BL2 BPC 1501S-W	1141904	1
Industrial box PC, Intel® Celeron® processor N3350 1.10/2.40 GHz, fanless, 32 GB eMMC data storage, 2x COM ports, IP30	BL2 BPC 1501E	1130669	1
Industrial box PC, Intel® Celeron® processor N3350 1.10/2.40 GHz, fanless, 32 GB eMMC data storage, 2x COM ports, IP30, WLAN	BL2 BPC 1501E-W	1141843	1

Products

Description	Type	Order No.	Pcs./Pkt.
Industrial box PC, Intel® Celeron® processor N3350 1.10/2.40 GHz, fanless, 32 GB eMMC data storage, 64 GB M.2 SSD, 2x COM ports, IP30, Windows 10 Enterprise 2019 LTSC operating system	BL2 BPC 1501E-64-W10	1158241	1
Industrial box PC, Intel® Celeron® processor N3350 1.10/2.40 GHz, fanless, 32 GB eMMC data storage, 64 GB M.2 SSD, 2x COM ports, IP30, WLAN, Windows 10 Enterprise 2019 LTSC operating system	BL2 BPC 1501E-W-64-W10	1158252	1
Industrial box PC, Intel® Celeron® processor N3350 1.10/2.40 GHz, fanless, 64 GB eMMC data storage, 2x COM ports, IP30, WLAN	BL2 BPC 1501E-64	1305869	1
Industrial box PC, Intel® Celeron® processor N3350 1.10/2.40 GHz, fanless, 32 GB eMMC data storage, 128 GB M.2 SSD, 2x COM ports, IP30	BL2 BPC 1501E-128	1305860	1
Industrial box PC, Intel® Celeron® processor N3350 1.10/2.40 GHz, fanless, 32 GB eMMC data storage, 128 GB M.2 SSD, 2x COM ports, IP30, Windows 10 Enterprise 2019 LTSC operating system	BL2 BPC 1501E-128-W10	1158235	1
Industrial box PC, Intel® Celeron® processor N3350 1.10/2.40 GHz, fanless, 32 GB eMMC data storage, 128 GB M.2 SSD, 2x COM ports, IP30, WLAN, Windows 10 Enterprise 2019 LTSC operating system	BL2 BPC 1501E-W-128-W10	1158245	1
Industrial box PC, Intel® Celeron® processor N3350 1.10/2.40 GHz, fanless, 32 GB eMMC data storage, 128 GB M.2 SSD, 2x COM ports, IP30, Windows 10 Enterprise 2019 LTSC operating system, Trusted Platform Module (TPM)	BL2 BPC 1501E-64-W10-T	1158247	1
Industrial box PC, Intel® Celeron® processor N3350 1.10/2.40 GHz, fanless, 32 GB eMMC data storage, 64 GB M.2 SSD, 2x COM ports, IP30, WLAN, Windows 10 Enterprise 2019 LTSC operating system, Trusted Platform Module (TPM)	BL2 BPC 1501E-W-64-W10-T	1158244	1
Industrial box PC, Intel® Celeron® processor N3350 1.10/2.40 GHz, fanless, 32 GB eMMC data storage, 128 GB M.2 SSD, 2x COM ports, IP30, Windows 10 Enterprise 2019 LTSC operating system, Trusted Platform Module (TPM)	BL2 BPC 1501E-128-W10-T	1158243	1
Industrial box PC, Intel® Celeron® processor N3350 1.10/2.40 GHz, fanless, 32 GB eMMC data storage, 128 GB M.2 SSD, 2x COM ports, IP30, WLAN, Windows 10 Enterprise 2019 LTSC operating system, Trusted Platform Module (TPM)	BL2 BPC 1501E-W-128-W10-T	1158231	1
Industrial box PC, Intel® Atom® processor E3940 1.60/2.80 GHz, fanless, 4 GB RAM, 64 GB eMMC data storage, IP30, Windows 10 Enterprise 2019 LTSC operating system	BL2 BPC 1541S-4/64-W10	1272688	1

Products

Description	Type	Order No.	Pcs./Pkt.
Industrial box PC, Intel® Atom® processor E3940 1.60/2.80 GHz, fanless, 8 GB RAM, 128 GB M.2 data storage, IP30, Windows 10 Enterprise 2019 LTSC operating system	BL2 BPC 1541E-8/128-W10	1272687	1
Industrial box PC, Intel® Atom® processor E3940 1.60/2.80 GHz, fanless, 4 GB RAM, 64 GB eMMC data storage, IP30	BL2 BPC 1541S-4/64	1272827	1
Industrial box PC, Intel® Atom® processor E3940 1.60/2.80 GHz, fanless, 8 GB RAM, IP30	BL2 BPC 1541E-8/0	1272829	1

Accessories

Description	Type	Order No.	Pcs./Pkt.
Mount, wall bracket	BL2 BPC 1500 WALL MOUNT KIT	1147655	1
Mount, DIN rail bracket	BL2 BPC 1500 DIN RAIL KIT	1147464	
Service socket with USB (socket/plug), type A with 0.6 m cable	SI-SES-U1A/0,6	1404514	1
Adapter, DisplayPort to VGA video adapter	DP to VGA ADPTR	2400173	1
Adapter, DisplayPort to DVI-I video adapter	DP to DVI ADPTR	2400174	1
Cable, DisplayPort to DisplayPort, 2 m	VL 2.0M DP CABLE	2404774	1
Memory, 64 GB M.2 SSD kit for BL2 BPC 15…E, IPC, heat spreader, bracket, and thermal pads are included	BL2 BPC 1500 64GB M.2 SSD KIT	1147738	1
Memory, 128 GB M.2 SSD kit for BL2 15… IPC, heat spreader, bracket, and thermal pads are included	BL2 BPC 1500 128GB M.2 SSD KIT	1147737	1

Visit phoenixcontact.net/products for available accessories

Replacement parts

Description	Type	Order No.	Pcs./Pkt.
Connector, printed circuit board connector	MC 1,5/ 2-STF-3,5	1847055	1

2.3 Dimensions

Figure 2-1 BL2 BPC 15…S… dimensions

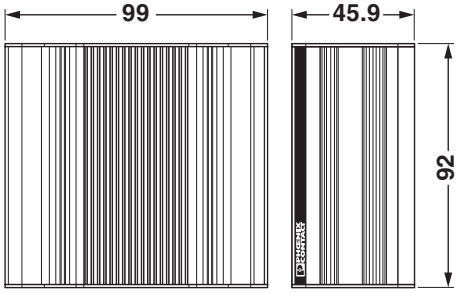

Figure 2-2 BL2 BPC 15…E… dimensions

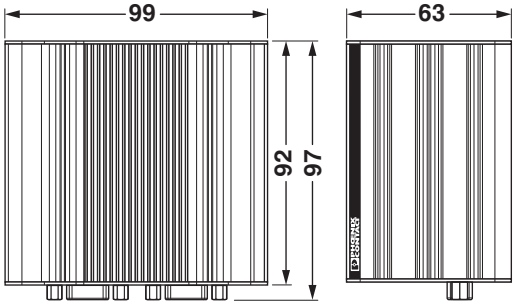

3 Installation

3.1 Mounting

The BL2 BPC 15… can be mounted on a wall or NS35 DIN rail. Use the appropriate section below to mount the BL2 BPC 15….

NOTE:
Install the BL2 BPC 15… with adequate clearance around the heat sink to provide sufficient air flow such that ambient temperatures do not exceed the operating limits. Install cooling fan(s) in the enclosure, if necessary.

Connectors and switches must be accessible. A wall panel thickness of 1.9 mm (14 ga.) is required for correct mounting with IP65 protection.

When installing the BL2 BPC 15… in a cabinet, follow these general rules:

– Verify clearances within the cabinet. Typically, leave at least 5 cm (2 in.) on each side with 12.7 cm (5 in.) on the connector side.
– Drill all holes wand make all cuts before beginning installation. Be sure to protect already installed components from shavings during this procedure.
– Supporting panels must be at least 14 ga. to provide proper support.

3.1.1 Wall mount

The wall mount kit (Order no. 1147655) must be ordered separately.

The BL2 BPC 15… can be attached to a flat surface in a wall-mount orientation using the four key holes. The mounting surface must be flat and not subject to vibration.

Installation

1. Place the wall brackets on the back of the PC.

Figure 3-1 Wall bracket installation (BL2 BPC 15…S… shown)

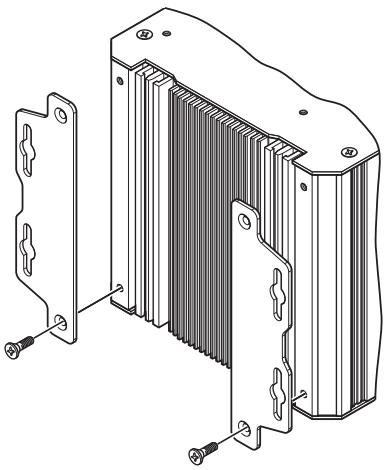

2. Attach the two brackets to the BL2 BPC 15… using the included M3x5 screws. Torque the screws to 0.5 Nm.

NOTE:
Improper torque may damage the threads in the aluminum housing.

3. Use the BL2 BPC 15… as a template (or refer to Figure 3-2) and mark the locations of the mounting holes on the mounting surface.

Figure 3-2 Wall-mount dimensions

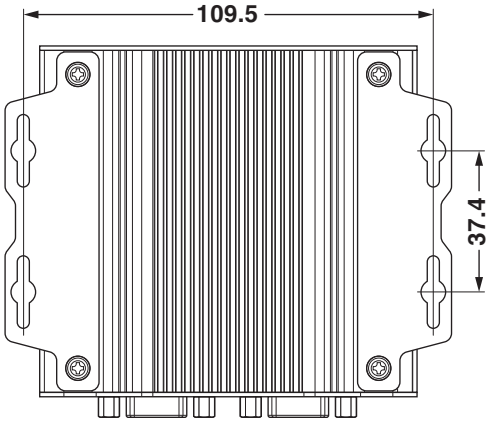

4. Use the correct anchor type for the mounting surface and securely attach the BL2 BPC 15… to the wall. Ensure the attaching hardware is in the small section of the mounting holes.

DIN rail mount

The DIN rail mounting kit (Order no. 1147464) is included with the BL2 BPC 15….

1. Install the mounting bracket on the BL2 BPC 15… with the included M3x5 screws so the connectors will be oriented downward after installation. Torque the screws to 0.5 Nm.

NOTE:
Improper torque may damage the threads in the aluminum housing.

Figure 3-3 DIN rail mounting bracket

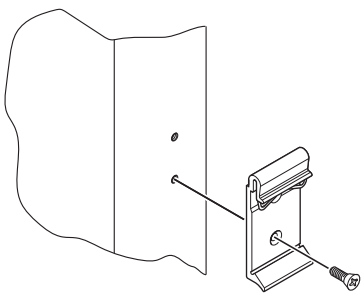

2. Angle the BL2 BPC 15… to the top edge of the mounting plate hangs on the top edge of the DIN rail (A).

Figure 3-4 Installation on a DIN rail

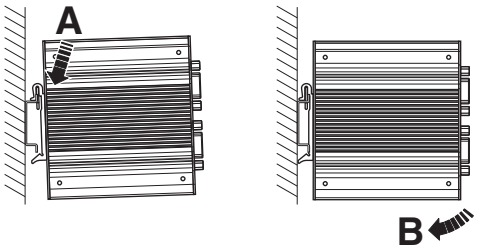

3. Rotate the BL2 BPC 15… down against the lower edge of the DIN rail (B). Press in until the latch snaps closed.
4. Secure the device on the rail with rail clamps.
5. If necessary to remove, push down on the top of the unit and then tilt out.

Figure 3-5 Removal from a DIN rail

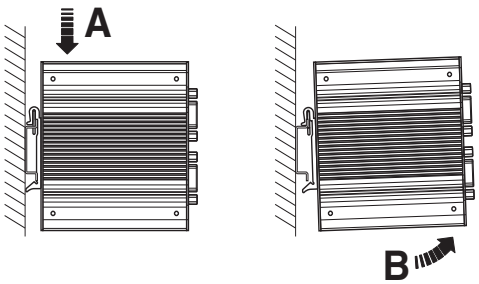

3.2 Interfaces

Figure 3-6 Connectors and ports

BL2 BPC 15…S…

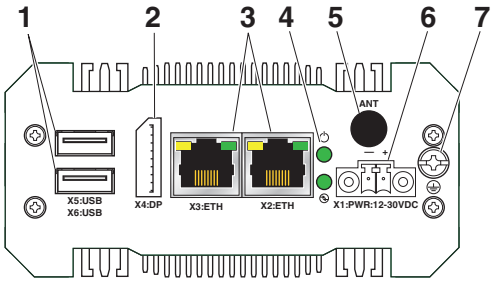

BL2 BPC 15…E…

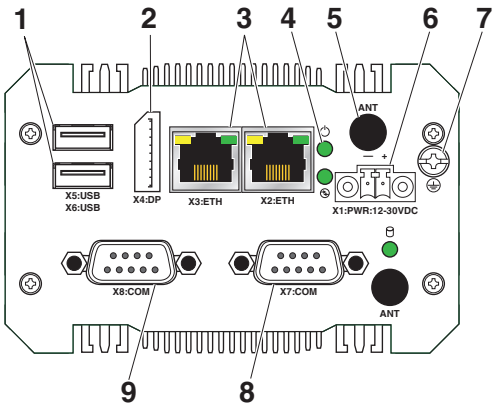

1	USB ports	**6**	Power connector
2	DisplayPort connector	**7**	Earth/ground lug
3	Ethernet RJ45 ports	**8**	COM port (configurable for RS-232/422/485)
4	LEDs	**9**	COM port (RS-232)
5	Antenna (BL2 BPC 15…W… only)		

After mounting the BL2 BPC 15…, make any necessary cable connections (see Figure 3-6).

The available connectors are:

– USB (USB): USB devices connect using Type A connectors. Both ports are USB 3.0 ports.

USB 3.0 ports utilize a blue connector.

– DisplayPort (DP): This port connects the BL2 BPC 15… to external digital displays with a corresponding DP++ connector

– Ethernet (ETH): Two RJ45 connectors allow the computer to communicate on a 10/100/1000 Base-T Ethernet network.

– Serial (COM): Two D-SUB 9 serial ports (BL2 BPC 15…E… only) are for serial communication. **X7: COM** may be configured as either RS-422, 4-wire RS-485, or 5-wire RS-232 (see “Serial communication (BL2 BPC 15…E… only)” on page 16).

Eternal display

External displays can be connected to the DP++ port of the BL2 BPC 15…. The BL2 BPC 15… supports three external displays.

3.2.1 Power connection

A removable connector is provided for connecting power to the BL2 BPC 15….

Figure 3-7 Power connection

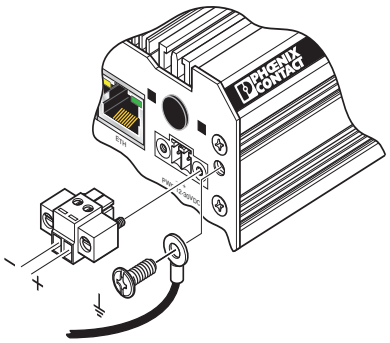

Connect a power source to the two-position removable connector. The connector accepts wire sizes from 0.2 to 1.5 mm^2 (28 to 16 AWG). Torque the wire-retaining screws in the connector to 0.25 Nm (2.2 lb_f-in.).

A ground screw allows connection of the chassis to an earth/ground point.

Connect the BL2 BPC 15… to a 12 to 30 V DC power supply.

NOTE:
To ensure safe operation, use safety extra-low voltage (SELV) according to DIN EN 61131 as a supply voltage.

This device is protection class III item of equipment.

The return (–) circuit and earth/ground point are connected internally.

BIOS is set to boot on power, allowing the system to boot as soon as the power plug is installed. This can be changed in the BIOS.

The operational voltage is 12 … 30 V DC as shown on the product at the power connector X1. However, the products only meet CE approval when operated at 24 V DC ±20% as shown on the product label.

3.2.2 Antenna installation

BL2 BPC 15…W… models include a factory-installed mini PCIe card and antenna (1) for wireless communication that connects to an antenna port (2).

Figure 3-8 Antenna installation

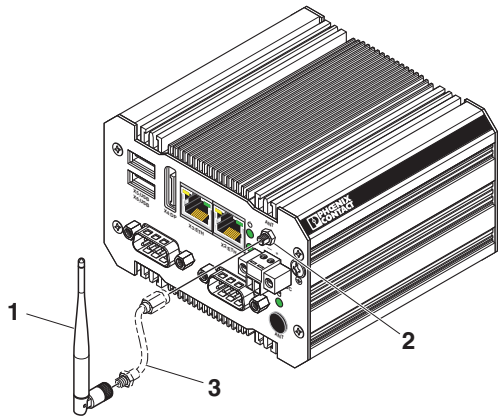

Since the BL2 BPC 15… is often installed within an enclosure, it may be advisable to install the antenna on the exterior of the enclosure rather than directly on the IPC. To do this an appropriate length antenna cable (3) must be purchased separately.

The antenna or antenna threads onto the BL2 BPC 15…. For external antenna mounting, route and secure the antenna cable appropriately within the enclosure.

3.2.3 Serial communication (BL2 BPC 15…E… only)

The X7 COM port can be configured to support RS-422, 4-wire RS-485, or 5-wire RS-232 physical layer signal levels. The physical layer is set using the UEFI setup accessed during the boot sequence (see “Configurable D SUB-9 connector” on page 26).

The X8 COM port operates on the RS-232 layer only.

The function of the pins in the D-SUB 9 connector varies with the different configuration settings.

Table 3-1 D-SUB 9 pinout

D-SUB 9 pin	RS-232[1]	RS-422	RS-485
1	–	TXD-	TXD-
2	RXD	TXD+	TXD+
3	TXD	RXD+	RXD+
4	–	RXD-	RXD-
5	GND	GND	GND
6	–	–	–
7	RTS	–	–
8	CTS	–	–
9	Wake on ring	Wake on ring	Wake on ring

[1] This is a limited, 5-wire implementation of the RS-232 standard.

4 Operation

4.1 LED operation

Three LEDs provide information on the operating status of the BL2 BPC 15….

Figure 4-1 LED locations (BL2 BPC 1501E-WLAN shown)

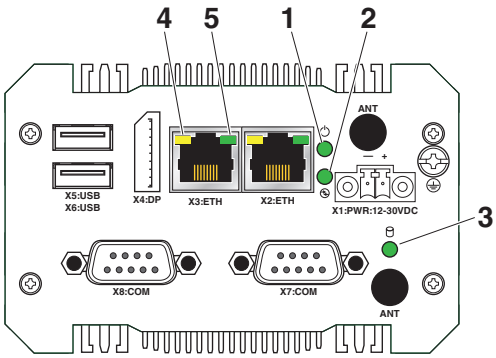

Table 4-1 Device LED indicators

	LED	Indication	Description
1	PWR	Green	When 24 V DC is applied and the power switch is turned on
		Off	No power available or outside of the specified range
2	RUN	Flashes green	Programmable
3	HDD (BL2 BPC 15…E… only)	Flashes green	Indicates data storage activity

Table 4-2 Ethernet port LED indicators

		Status	Description
1	Activity Link	Off	No link
		Solid orange	Linked
		Flashing orange	Active data transfer
2	Speed	Off	10 Mbps connection
		Orange	100 Mbps connection
		Green	1000 Mbps connection

5 Maintenance

5.1 M.2 drive

NOTE: Electrostatic discharge
The module contains components that can be damaged or destroyed by electrostatic discharge. When handling the module, observe the necessary safety precautions against electrostatic discharge (ESD), in accordance with EN 61340-5-1 and IEC 61340-5-1.

Some BL2 BPC 15…E… products are equipped with an M.2 drive slot for storage devices, either populated from the factory or as an empty bay for customer installation.

NOTE:
The BL2 BPC 15…E… uses an AHCI bus and does not support the use of NVMe drives.

The BL2 BPC 15…E… accepts 22 x 42 SATA 3 M.2 drives with B key.

5.1.1 Installation

1. Remove the power connector and ground screw from the BL2 BPC 15…E… to disconnect the input power (see “Power connection” on page 15).
2. Remove any remaining connectors and set the BL2 BPC 15…E… on a clean workbench.

Figure 5-1 Interface panel showing mounting screws

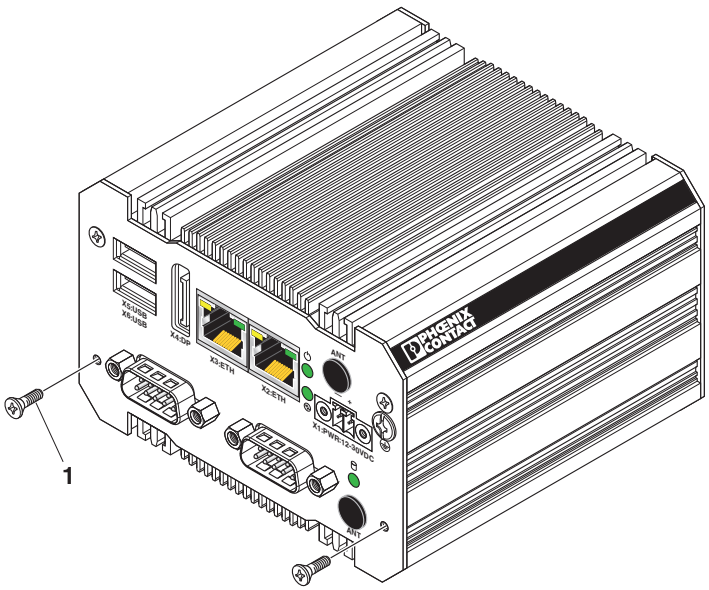

3. Remove the two screws (1) in the interface panel.

Figure 5-2 Top panel removal

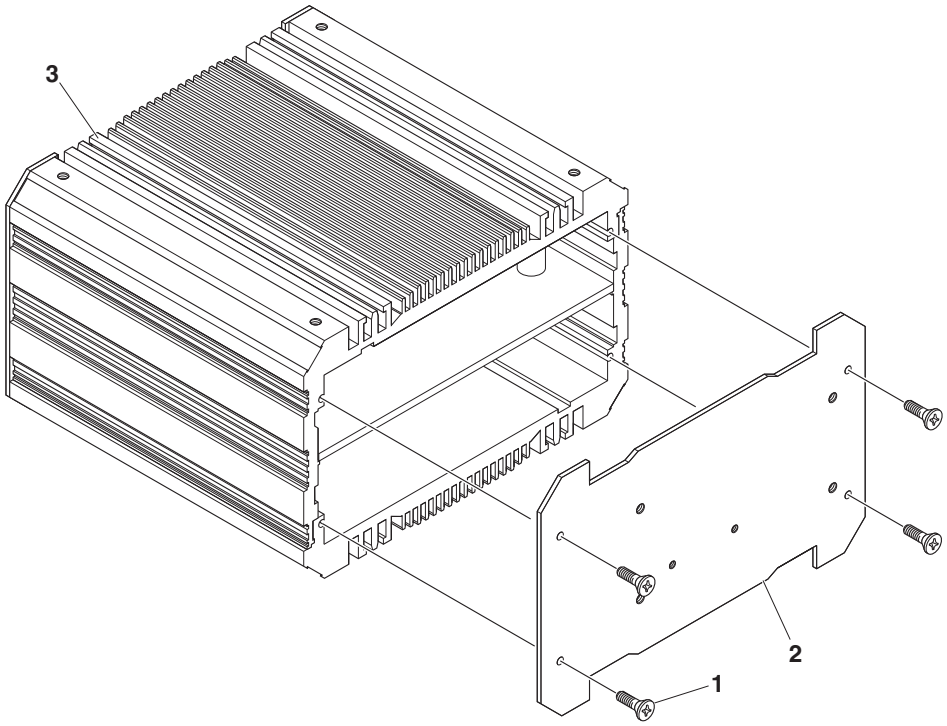

4. Remove the four screws (1) on the top panel (opposite end from the interface panel) and remove the panel (2).
5. With the top panel off, the heat sink (3) can be removed to access the circuit board and drive bay.

Figure 5-3 Drive installation

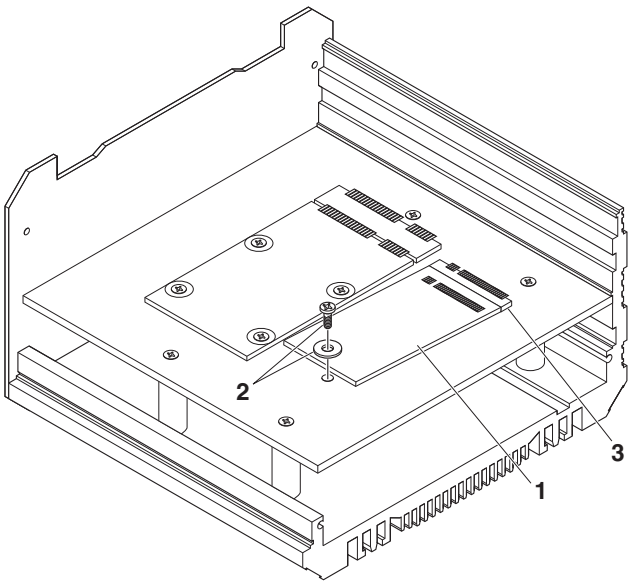

6. If replacing an M.2 card (1), remove the screw and washer (2) securing the card. The card will pop off the circuit board to allow it to slide out of the slot (3).
7. Insert the new M.2 card straight into the slot. Ensure it is fully seated.

NOTE:
Be careful to orient pin 1 on the card to pin 1 on the slot.

8. Secure the card using the hardware previously removed. Torque the screw to 0.39 Nm.
9. Place the heat sink on the chassis. Position the top panel and secure with the hardware previously removed (see Figure 5-2). Torque screws to 0.39 Nm.
10. Reinstall the interface panel using the previously removed hardware (see Figure 5-1). Torque screws to 0.39 Nm.

5.2 Real-time clock battery

The battery supplies power to the real-time clock (RTC) and maintains the UEFI settings in the BL2 BPC 15… when the system is not connected to a 24 V DC power source. If power is removed while the battery is discharged or removed, any user-defined UEFI settings will be lost, and a “CMOS checksum error” message appears once power is restored.

To account for user-defined UEFI settings, it is recommended that they be recorded through photos or a separate document before the battery is depleted or removed. Store the photos or documents on a different device so they are accessible in the event of a boot failure.

The battery is type BR2032. The battery has a typical life of five years and may require replacement.

5.2.1 Battery replacement

NOTE: Electrostatic discharge
The module contains components that can be damaged or destroyed by electrostatic discharge. When handling the module, observe the necessary safety precautions against electrostatic discharge (ESD), in accordance with EN 61340-5-1 and IEC 61340-5-1.

The terms upper and lower in the following procedure refers to the images, not the position when the product is installed.

1. Remove the power connector and disconnect the ground at the ground screw from the BL2 BPC 15…E… to disconnect the input power (see “Power connection” on page 15).
2. Remove any remaining connectors and set the BL2 BPC 15…E… on a clean workbench.
3. Remove the two upper screws (1) securing the back panel (2) to the upper heat sink (3). It is not necessary to remove the two lower screws.
4. Remove the two lower screws (4) securing the interface panel to the lower heat sink (5).

Figure 5-4 Separating the heat sink assemblies

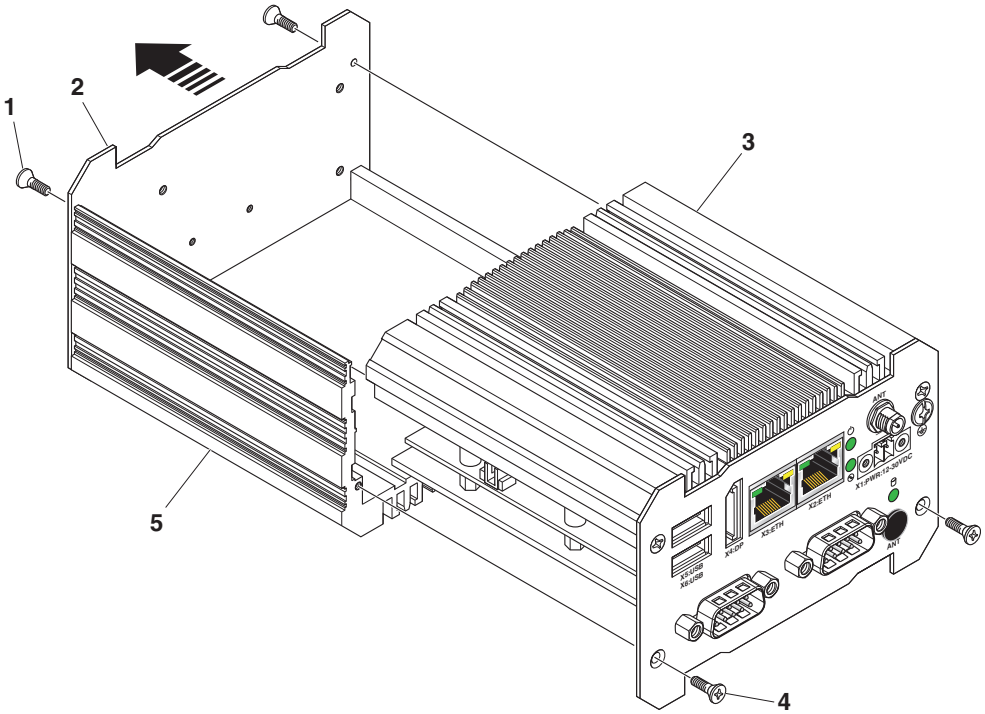

5. Slide the upper and lower heat sink-and-plate assemblies away from each other. Note that the circuit boards will come along with the upper heat sink.

Friction may make separating the two heat sink assemblies difficult. Grasp firmly or carefully use a screwdriver to slide the two assemblies apart.

Figure 5-5 Accessing the battery

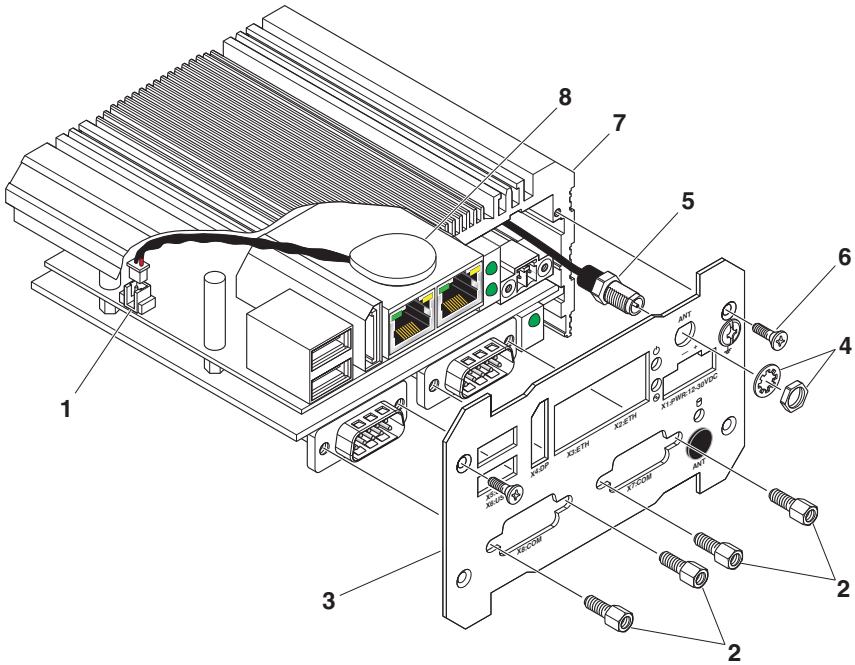

6. Locate the battery socket (1). Use a needle nose pliers to pull the plug from the socket.
7. Use a 5 mm socket to remove the four jack screws (2) securing the D-SUB 9 connectors to the interface plate (3).
8. If equipped with antenna connectors, remove the jam nut and lock washer (4) to separate the antenna connector (5) from the interface plate.
9. Remove the two upper screws (6) securing the interface plate to the heat sink (7). Carefully separate the interface plate from the circuit board.
10. Locate the battery (8) above the LAN connectors. Use a screwdriver to loosen the battery from the adhesive that secures it in place and remove the battery and cable. Note the cable routing for installation of the replacement battery.
11. Position the new battery in place of the old one. Route the cable as previously noted.
12. Insert the battery cable plug into the socket.
13. Reinstall the interface plate and any connectors previously removed. Secure interface plate to the upper heat sink with the previously removed hardware. Torque hardware to 0.39 Nm.
14. Carefully slide the two heat sink assemblies together, taking care not to pinch any wires. Secure the components with the previously removed hardware. Torque hardware to 0.39 Nm.
15. Secure the heat sink assemblies together using the screws previously removed. Torque screws to 0.5 Nm.
16. Reinstall the BL2 BPC 15… and attach previously removed connectors.
17. Apply power to the unit and note the UEFI status.

5.3 UEFI

The Unified Extensible Firmware Interface (UEFI) is a software interface between an operating system and the PC platform firmware. The UEFI firmware initializes and configures the PC hardware and loads the target operating system. In modern PCs, the UEFI firmware replaces the legacy Basic Input/Output System (BIOS) firmware.

NOTE:
Changing UEFI parameters can lead to system instability and data loss. Therefore, it is recommended that only advanced users modify the UEFI settings.

To access the UEFI setup utility, there must be an actual (physical) keyboard attached to one of the USB ports.

During the boot process, press the <F2> or <Delete> key continually before the operating system initiates. Once the main screen appears, follow the prompts. Use the arrow keys to navigate to the desired area.

5.3.1 Configurable D SUB-9 connector

1. During the power-up process, press the <F2> or <Delete> key until the UEFI interface appears.
2. Navigate to the “Configuration/Super IO Configuration/Transceiver Mode” menu and follow the prompts.

Figure 5-6 “Configuration/Super IO Configuration/Transceiver Mode” selection

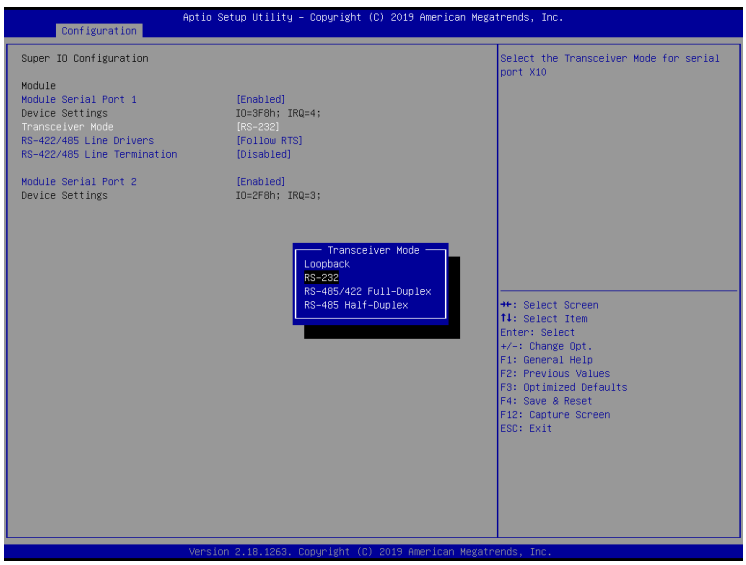

Figure 5-7 “Line Termination” settings

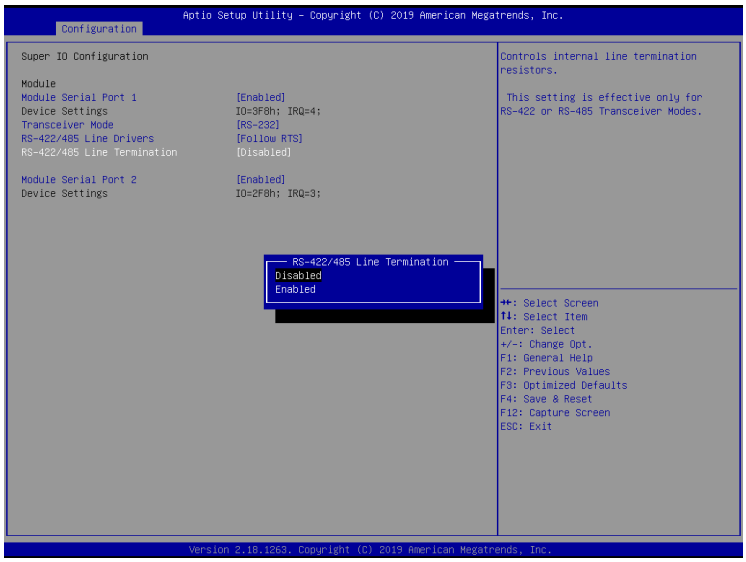

3. Make sure to adjust the RS-422/485 line driver settings accordingly.
4. When finished, save the changes and reboot the system.

A Technical appendix

A 1 Technical data

General data	
Overall, dimensions (width x height x depth)[1]	
BL2 BPC 15…S…	99 x 92 x 46 mm
BL2 BPC 15…E…	99 x 92 x 63 mm
Ambient temperature (operation)[2]	
BL2 BPC 1501…	-20 … 50°C
BL2 BPC 1541… with eMMC	-40 … 70°C
BL2 BPC 1541… with M.2	-20 … 60°C
	NOTE: Operation above 60°C ambient temperature invalidates the UL listing.
Ambient temperature (storage/transport)	-40 … 85°C
Permissible humidity (relative)	5% … 85%, non-condensing
Weight	
BL2 BPC 15…S…	0.614 kg
BL2 BPC 15…E…	0.746 kg
Degree of protection	IP30
Mounting	Wall or DIN rail
LED indicators	Power, SATA, Run, Error

1 Dimensions are overall, including bezel

2 Temperatures listed require a minimum of 0.5 m/s airflow.

Electrical data	
Power supply, nominal	12 … 30 V DC (operational voltage) 24 V DC ±20% (CE listing)
Type of connection	Removable screw-type and screw lug
Conductor size	0.2 … 1.5 mm^2 (28 … 16 AWG)
Torque, wire clamping screw	0.22 … 0.25 Nm
RTC battery, typical life	BR2032, 5 years

Current and power data	
Current consumption @ 24 V[1]	
Typical	0.53
Maximum	0.70 A
Power, maximum @ 24 V[1]	
Typical	12.7 W
Maximum	16.8 W

1 Windows 10, 32 GB M.2 drive, 4 GB RAM, loopback plugs in RS-232 and LAN ports, USB ports fully loaded, running Burn-in® tests at 100%

Operating systems	
Operating system (available on some models)	Windows® 10 IoT Enterprise LTSC 2019

Data storage	
eMMC (available on some models)	
Size	32 GB
M.2 SSD (available on some models)	
Dimensions, maximum	22 x 42 mm
Bus interface	SATA 3.0
Key	B
Number of bays	1
RAID support	None

Main memory	
RAM	
BL2 BPC 1501S...	2 GB LPDDR4
BL2 BPC 1501E..., BL2 BPC 1541S...	4 GB LPDDR4
BL2 BPC 1541E...	8 GB LPDDR4

Processor data	BL2 BPC 1501…	BL2 BPC 1541…
Processor	Intel Celeron N3350	Intel Atom E3940
Clock speed	1.10 GHz 2.40 GHz burst	1.60 GHz 1.80 GHz burst
Cache	2 MB	2 MB
Number of cores	2	4
Number of threads	2	4
Maximum TDP	6 W	9.5
Number of memory channels	2	4

Interfaces	
USB	2x Type A USB 3.0
Serial connection, BL2 BPC 1501E… only	2x D-SUB 9 (male), UEFI selectable for RS-232/422/485[1]
Video out	1x DP++
Graphic processor	Intel HD Graphics 500
Number of Ethernet connectors	2
Ethernet connection	10/100/1000 Mbps
LAN chipset	2x Intel Ethernet controller i210

1 This is a limited implementation of the EIA-232 standard.
RS-485 requires a four-wire installation unless software controls data flow management.

Mechanical tests	
Shock test according to IEC 60068-2-27	15g with 11 ms impulse, 18 shocks total
Vibration resistance according to EN 60068-2-6	1g

Conformance with EMC directives	
EN 61000-6-4, Class A	
EN 61000-6-2	

Approvals	
CE compliant	
FCC (CFR Title 47 Part 15 Subpart B: 2018 Class A)	
EN 55022, EN 55024	
EN 300 328 V2.2.2; EN 301 893 V2.1.1; EN 301 4899-1 V2.1.1; EN 301 489-17 V3.1.1	

B Appendixes

B 1 List of figures

Section 2

Figure 2-1: BL2 BPC 15…S… dimensions 10
Figure 2-2: BL2 BPC 15…E… dimensions 10

Section 3

Figure 3-1: Wall bracket installation (BL2 BPC 15…S… shown) 11
Figure 3-2: Wall-mount dimensions 12
Figure 3-3: DIN rail mounting bracket 12
Figure 3-4: Installation on a DIN rail 13
Figure 3-5: Removal from a DIN rail 13
Figure 3-6: Connectors and ports 14
Figure 3-7: Power connection 15
Figure 3-8: Antenna installation 16

Section 4

Figure 4-1: LED locations (BL2 BPC 1501E-WLAN shown) 19

Section 5

Figure 5-1: Interface panel showing mounting screws 21
Figure 5-2: Top panel removal 22
Figure 5-3: Drive installation 22
Figure 5-4: Separating the heat sink assemblies 24
Figure 5-5: Accessing the battery 25
Figure 5-6: “Configuration/Super IO Configuration/Transceiver Mode” selection . 26
Figure 5-7: “Line Termination” settings 27

B 2 List of tables

Section 3

Table 3-1: D-SUB 9 pinout 17

Section 4

Table 4-1: Device LED indicators 19
Table 4-2: Ethernet port LED indicators 19

Please observe the following notes

General terms and conditions of use for technical documentation

Phoenix Contact reserves the right to alter, correct, and/or improve the technical documentation and the products described in the technical documentation at its own discretion and without giving prior notice, insofar as this is reasonable for the user. The same applies to any technical changes that serve the purpose of technical progress.

The receipt of technical documentation (in particular user documentation) does not constitute any further duty on the part of Phoenix Contact to furnish information on modifications to products and/or technical documentation. You are responsible to verify the suitability and intended use of the products in your specific application, in particular with regard to observing the applicable standards and regulations. All information made available in the technical data is supplied without any accompanying guarantee, whether expressly mentioned, implied or tacitly assumed.

In general, the provisions of the current standard Terms and Conditions of Phoenix Contact apply exclusively, in particular as concerns any warranty liability.

This manual, including all illustrations contained herein, is copyright protected. Any changes to the contents or the publication of extracts of this document is prohibited.

Phoenix Contact reserves the right to register its own intellectual property rights for the product identifications of Phoenix Contact products that are used here. Registration of such intellectual property rights by third parties is prohibited.

Other product identifications may be afforded legal protection, even where they may not be indicated as such.

How to contact us

Internet

Up-to-date information on Phoenix Contact products and our Terms and Conditions can be found on the Internet at:
phoenixcontact.com

Make sure you always use the latest documentation.
It can be downloaded at:
phoenixcontact.net/products

Subsidiaries

If there are any problems that cannot be solved using the documentation, please contact your Phoenix Contact subsidiary.
Subsidiary contact information is available at phoenixcontact.com.

Published by

PHOENIX CONTACT GmbH & Co. KG
Flachsmarktstraße 8
32825 Blomberg
GERMANY

PHOENIX CONTACT Development and Manufacturing, Inc.
586 Fulling Mill Road
Middletown, PA 17057
USA

Should you have any suggestions or recommendations for improvement of the contents and layout of our manuals, please send your comments to:
tecdoc@phoenixcontact.com